Learning and Individual Differences xxx (2016) xxx–xxx

Contents lists available at ScienceDirect

Learning and Individual Differences

journal homepage: www.elsevier.com/locate/lindif

Using creativity to predict future academic performance: An application of Aurora's five subtests for creativity☆

Catalina Mourgues [a,b], Mei Tan [a,c], Sascha Hein [a,c], Julian G. Elliott [d], Elena L. Grigorenko [a,c,e,*]

[a] Yale University, USA
[b] Pace University, USA
[c] University of Houston, USA
[d] Durham University, UK
[e] Moscow State University for Psychology and Education, Russia

ARTICLE INFO

Article history:
Received 28 January 2015
Received in revised form 28 January 2016
Accepted 2 February 2016
Available online xxxx

Keywords:
Creativity
Academic achievement
Specific and general domains of creativity

ABSTRACT

In this study, we investigated the specific contribution of creativity, as assessed by the five creativity subtests of the Aurora Battery, to future academic performance, independently of past academic performance. Specifically, in a sample of 1165 7th grade students (UK Year 8, 48.3% female) we first looked at whether the factorial structure of the five subtests was better explained by a domain-general (i.e., the *g*-factor of creativity) or domain-specific (i.e., verbal, numerical, figural) model of creativity. Then, in a subsample of 315 students (46.3% females) we estimated a structural equation model to explore the mediating role of creativity between students' performance on different academic tests, specifically the Key Stage 2 test (KS2), taken almost two years before Aurora, and the General Certificate of Secondary Education exams (GCSE), taken almost three and a half years after Aurora. Results showed that Aurora's subtest scores were better represented by a single latent factor (a general creativity factor) than multiple (domain-specific) creativity factors. Furthermore, this creativity factor predicted individuals' performance on the GCSE four years after taking Aurora, even after controlling for previous academic performance. In addition, creativity mediated the relationship between the KS2 and GCSE. These results suggest that a domain-general form of creativity contributes to future academic performance above and beyond other academics skills.
© 2016 Published by Elsevier Inc.

Creativity has been recognized as an important characteristic that may support success in school and in later work (Howieson, 1981; Torrance, 1972). Thus, studies on the relationship between creativity and other cognitive and non-cognitive constructs important to schooling, such as academic achievement (Kaufman, 2010; Sternberg & The Rainbow Project Collaborators, 2006), intelligence (Kim, Cramond, & VanTassel-Baska, 2010; Kornilov, Tan, Elliott, Sternberg, & Grigorenko, 2011), personality (Feist, 1998; Holland, 1961), and school environment (Flynt, 2008) have been carried out to better understand the role of creativity as distinct from the analytical cognitive skills (i.e., IQ) that are seen universally as key predictors of academic performance.

Attempts to clarify the role of creativity in academic performance have mainly utilized cross-sectional study designs and the analyses of correlational data with inconsistent findings. This inconsistency, as we discuss below, may be a function of (a) different methods of measuring creativity and academic performance; (b) the ability to control for other indicators of cognitive performance when assessing the associations between creativity and academic performance; and (c) a relative shortage of longitudinal studies linking creativity and future academic performance over time, controlling for previous academic performance. We argue that a longitudinal perspective is warranted to fully capture the differential associations between distinct domains of creativity and academic performance over and above the contributions of other indicators of cognitive functioning and/or previous academic performance. We support this argument below by outlining how studies of creativity and academic performance have resulted in an as yet mixed picture of their relationship. We then discuss why measuring creativity may represent a way to "add value" to predictions of achievement. Lastly, we highlight longitudinal studies that have set a precedent by linking creativity and academic achievement.

1. Measuring creativity and academic performance

Creativity has been conceived as domain-general (Plucker & Beghetto, 2004), domain-specific (Csikszentmihalyi, 1990; Han & Marvin, 2002), or as a skill that can function as both general and specific (Amabile, 1983; Hong, Milgram, & Gorsky, 1995; Sternberg & Lubart, 1999). Domain-general views of creativity stipulate that people are

☆ Author Note: We thank Karen Jensen Neff and Charles Neff for their generous support of this study. We also thank our raters in England — Enid and Chris, and Jacqui and Pat — whose diligent scoring of thousands of children's creative responses made this study possible. Grateful thanks, in addition, go out to the Centre for Evaluation and Monitoring (CEM) in Durham, England — particularly colleagues Neil Defty and Paul Banks — for their collaboration. It's always a pleasure to work with them.
* Corresponding author at: 230 South Frontage Road, New Haven, CT 06520, USA.
E-mail address: elena.grigorenko@yale.edu (E.L. Grigorenko).

http://dx.doi.org/10.1016/j.lindif.2016.02.001
1041-6080/© 2016 Published by Elsevier Inc.

more likely to show consistent creative performance across domains, while domain-specific views of creativity suggest that people may show high levels of creativity in some specific areas (e.g., arts, science, math, music, verbal, visual), but lower levels in others. Baer (2010) and Silvia, Kaufman, and Pretz (2009) have proposed that the variety of tasks used to assess creativity, as well as the various data analytic methods employed to analyze the corresponding data, may be the reason that creativity skills appear to be both general and specific nature and why a mixed pictures has so far emerged.

In this section we exemplify how the dimensions or facets of creativity, the method of scoring for creativity, the domains of the creativity task, the age of the students, and the type of academic achievement test used may have an effect on the magnitude of the reported correlations. In general, investigations into the relationship between creativity and academic performance have been correlational. From such studies, we know that creativity and academic performance are usually positively related to each other, but we also know that the magnitude of this relationship can depend upon specific characteristics of the assessments used (e.g., the dimension of creativity assessed, how it is scored, and the task or set of scores representing academic performance). The most common design of these studies involves the administration of a creativity test concurrently with academic performance measures. Frequently, the results of these studies have reported positive but weak correlations (from $r = .14$ to $r = .40$, $ps < .05$) between creativity and academic performance (Ai, 1999; Cicirelli, 1965; Freund, Holling, & Preckel, 2007; Gralewski & Karwowski, 2012; Kornilov et al., 2011; Tan, Mourgues, Bolden, & Grigorenko, 2014). The strength of these correlations may be related to the kinds of tests used to measure creativity and the domains of academic performance being examined.

In an older study, Marjoribanks (1976) reported correlations between the Minnesota Tests of Creative Thinking — an adaptation of the Torrance and Guilford tests — two measures of intelligence (i.e., verbal and non-verbal reasoning), and standardized academic achievement tests taken by 400 12-year-old students in Australia. The creativity tasks were scored for the dimensions of: a) originality, the number of statistically infrequent ideas; b) fluency, the number of relevant ideas; c) flexibility, the number of different categories; and d) a general creativity score that was computed by combining each of these dimensions. The dimension and the general creativity score were correlated with different subjects of academic performance and measures of intelligence. Focusing on the creativity–academic performance relationship, the study found moderate correlations between the general score of creativity and different academic domains: English ($r = .43$), mathematical comprehension ($r = .41$), mathematical understanding ($r = .42$), French ($r = .44$), biological science ($r = .48$), and physical science ($r = .40$). Using the same task, Cicirelli (1965) investigated the relationship between intelligence, academic performance and creativity in a group of the 6th grade students. Four scores were generated for creativity: a) one for fluency, flexibility, and originality in the verbal tasks; b) a second for fluency, flexibility, and originality in the non-verbal tasks; c) a third for elaboration in the verbal tasks; and finally d) a fourth for elaboration in the non-verbal tasks. Results showed that creativity in the non-verbal tasks was less related to reading, language and arithmetic ($r = .09$ to $r = .16$, $ps =$ ns) than creativity in the verbal tasks ($r = .14$ to $r = .30$, $ps < .05$).

Another study with older students, Niaz, Núñez, and Pineda (2000) used the figural form of the Torrance Test of Creative Thinking with 141 high school students. They found correlations with chemistry ($r = .23$, $p < .05$), earth science ($r = .38$, $p < .005$), Spanish ($r = .30$, $p < .005$), and geography ($r = .34$, $p < .005$), but not with arithmetic ($r = .16$, $p =$ ns) or physics ($r = .04$, $p =$ ns) when applying the general creativity score. However correlations between specific dimensions of creativity and performance in specific academic subjects were not always significant. This was the case for chemistry and the score for flexibility ($r = .16$, $p =$ ns). Yet chemistry was related significantly with the originality score ($r = .20$, $p < .05$) — despite only minor differences in the magnitude of these associations. However, while correlational studies illustrate that creativity and academic achievement may be related to each other in different ways, depending on the specifics of the assessments involved, the information these studies provide is limited as they are cross-sectional and correlational by design.

2. The 'value added' by creativity

Creativity may be understood as having a role in academic performance. It may even add useful information to our understanding of academic performance, over and above indicators of intelligence. When investigating the prediction of academic performance involving creativity, most often, intelligence has been the primary predictor. For example, McCabe (1991) explored the influence of intelligence and creativity on the academic achievement of 210 females in grades 6 to 8 (ages 12 to 16) in three subject areas: English, mathematics and art as measured by standardized tests and teacher report. Seven scores of creativity were obtained using the Torrance Tests of Creative Thinking; intelligence was measured with the ACER ML and MQ tests for verbal and numerical skills, respectively (ACER, 1981). Positive and significant correlations with academic performance and intelligence were reported for all of the creativity dimensions (the range of the correlations was $r = .12$ to $r = .47$, $ps < .05$). The only non-significant correlation for all 7 scores of creativity was with the teacher report in art. In the regression analyses conducted to investigate whether creativity might predict academic achievement, as measured both by standardized tests and by teacher reports separately, the measures of creativity were non-significant in the model; only the IQ measures predicted students' academic performance.

In other approaches, however, creativity has been found to contribute to the prediction of academic performance in addition to measures of intelligence. In a multilevel analysis (in which classes were the level-2 clusters), Freund et al. (2007) deconstructed sources of variance in self-reported academic performance and intelligence in students in the 7th to 10th grades. Intelligence was measured using the Berlin Intelligence Structure Model (BIS), which quantifies intelligence through four operations (e.g., memory, reasoning, creativity and processing speed) and three domains (e.g., verbal, figural and numerical). One independent model for each of the three areas of academic performance was tested (e.g., putting language, social science, and math and science). The results showed that creativity explained more variability in the social sciences ($\beta = .23$, $p < .001$) than math ($\beta = .104$, $p < .001$) or language ($\beta = .10$, $p < .001$).

Using the BIS (but utilizing two external creativity tasks instead of creativity as assessed by the BIS), Rindermann and Neubauer (2004) tested several structural equation models to explore the role of processing speed in relation to intelligence and creativity, and how these variables (together or separately) might predict academic performance in a sample of 271 German students from the 9th to 11th grade. Specifically, creativity was assessed with two tasks, the Verbaler Kreativitäts-Test (VKT), which captures verbal productivity (e.g., fluency), and Verwendungs-Test (VWT), in which the student must produce different reasonable and innovative applications of given objects (e.g., originality). The scores from these two tasks were combined in one factor in the models. Results showed that processing speed positively influenced both intelligence and creativity, which in turn had a significant effect on school performance, mediating the effect of processing speed on school performance. Specifically, the creativity factor appeared to have a modest but significant effect on school performance ($\beta = .26$, bivariate $r = .25$, $ps < .05$). Thus, both intelligence and creativity were able to predict academic performance, even when both were controlled for speed of processing, showing that creativity contributes to academic performance as a construct that is distinct from intelligence.

Please cite this article as: Mourgues, C., et al., Using creativity to predict future academic performance: An application of Aurora's five subtests for creativity, *Learning and Individual Differences* (2016), http://dx.doi.org/10.1016/j.lindif.2016.02.001

3. Longitudinal studies linking creativity and academic performance

Only a very few studies of creativity and academic performance have used a longitudinal predictive design. Some studies have shown that creativity measures can predict academic performance incrementally in the presence of other cognitive and non-cognitive measures, while controlling for previous academic performance. Sternberg & The Rainbow Project Collaborators (2006) explored the ability of the Rainbow measures to predict GPA in 1013 students predominantly in their first year of college or their final year of high school. The Rainbow measures were designed to assess analytical, creative, and practical abilities as specified by the theory of successful intelligence (Sternberg, 1999). The instruments consisted of a set of multiple-choice tests — the Sternberg Triarchic Abilities Test (STAT; Sternberg, 1999; Sternberg, Ferrari, Clinkenbeard, & Grigorenko, 1996) — and performance measures of creative, analytical and practical skills. The STAT test has nine subscales that combine three skills (i.e., analytical, practical, and creative skills) with three types of item content (i.e., verbal, quantitative, and figural). The creative performance tasks included three open-ended tasks to measure creative skills (Cartoons, Oral and Written Stories). The Rainbow and STAT assessments were taken during the last semester of high school or at the beginning of the first year of college. In a structural equation model, the creativity scales from the STAT, and one composite score for the three performance creativity tasks, high school GPA, grade point average (four years of high school GPA), the Scholastic Aptitude Test (SAT) verbal (SAT-V) and math scores (SAT-M) were used to predict GPA in the first year of college. The results indicated that the creative component of the STAT contributed significantly to the incremental prediction of college GPA ($\beta = .20$; the p-value was not presented); however, the composite score for the creativity open-ended tasks did not. In addition, a very strong path between the composite score for the creativity performance tasks and SAT-V ($\beta = .78$, p-value was not presented) was found. This finding, along with the fact that the STAT creativity measures did predict college GPA above and beyond the SAT (including the SAT-V), suggests that STAT creativity tests add something distinct to the prediction of academic performance beyond mere verbal expression skills. In a second analysis, the incremental prediction of college GPA was explored in a regression analysis. The independent variables were the SAT-V and SAT-M, high school GPA, and the STAT scores for analytical, creative and practical skills, in addition the composite scores for the performance measures of creative, analytical and practical skills were included in the model separately. Concerning creative performance specifically, the STAT creativity scores ($\beta = .26$, $p < .05$) and the oral stories of the performance creativity tests ($\beta = .27$, $p < .05$) predicted college GPA above and beyond the SAT scores, high school GPA, as well as the other measures of analytical, practical and creative skills.

In a more recent set of studies, Grigorenko et al. (2009) addressed the question of whether indicators beyond middle school GPA (i.e., previous academic performance) and standardized test scores (Secondary School Admission Test scores, SSAT) might predict academic success (high school GPA) in a highly competitive private preparatory high school. They considered a broad variety of possible factors, including facets of self-regulated learning (SRL, such as academic self-efficacy, academic motivation, academic locus of control) and measures of Wisdom, Intelligence Creativity Synthesized (WICS; Sternberg, 2003) in a longitudinal design. In one study, the entire class of high school freshmen was evaluated three times with eight different assessments: two targeting practical skills (tacit knowledge of school environment, practical reasoning), two for creative skills (creative writing and ability to deal with novelty/scientific reasoning), one addressing aspects of wisdom (ethical reasoning and attribution of blame), and three self-report scales addressing academic self-efficacy, locus of control and intrinsic/extrinsic motivation. Here we discuss only the results involving the creativity measures, the first of which was a creative writing task, and the second of which was a scientific reasoning task designed to elicit innovative or novel but effective applications of scientific knowledge. When changes in the SRL and WICS indicators across time were examined in association with school GPA changes across time, along with other variables, higher creativity in writing was associated with higher school GPA. That is, students who showed higher high school GPA also showed higher levels of creative writing ($B = .36$, $p < .05$). In a second analysis, the principal components for the measures of SRL and WISC were obtained for each score and used to predict the average GPA across six academic terms in a hierarchical regression analysis. In this analysis the measures were entered in five steps, the SSAT and pre high school GPA, the indicator of practical competence, the creative competence task, the ethical reasoning task and finally the SRL indicators. Based on this analysis, the creative competence tasks were not significant predictors of average GPA at the high school level.

A second study was then conducted to investigate the power to predict first-trimester high school GPA using a number of conventional assessments (i.e., previous middle school GPA and SSAT), the self-report instruments described above on indicators of SRL, and rankings assigned by the admission officers in creativity and practicality. All of these assessments were collected during the admissions process. Of the 259 students accepted at the high school, only 88 had completed self-reports. A regression analysis with these 88 students showed that the admissions ratings for creativity and practical skills were not significant predictors of their first semester high school GPA.

In summary, these studies offer examples of very different creativity assessments that have appeared to contribute differentially to later academic performance. While these studies and their respective instruments are not comparable in many ways, it bears noting that the more domain-general STAT score predicted later academic performance over and above previous academic achievement. However, the more domain-specific creative writing and scientific reasoning tasks, as well as the less-specified expert rating for creativity, appeared less robust for such purposes. Still, the inclusion of some creativity measures may improve the accuracy of the prediction of future academic performance.

4. The present study

From the studies above, two aspects are important to highlight with respect to the study presented here. One is that creativity might help predict academic performance, showing that creative skills may have a role in future academic success. A second aspect is that the differences in the intended domains and the scoring approaches of various creativity tests (e.g., domain-specific or domain-general) might influence the power of creative performance to predict academic success in the presence of other academic variables. In this study, we explored whether creativity as measured by the five subtests of creativity from the Aurora Battery (Chart, Grigorenko, & Sternberg, 2008; Kornilov et al., 2011; Tan et al., 2014), based upon the theory of successful intelligence (Sternberg, 1999), might predict academic performance four years later independently from previous academic assessment (i.e., the KS2 test). In this way, we intend to show that the skills measured by these subtests for creativity could be different from academic performance but useful in future achievement. To test this idea, first, the factorial structure (i.e., domain-generality vs. domain-specificity) of the five subtests for creativity from the Aurora Battery was investigated. Using the factor scores from the best-fitting model, the contributions of creativity indicators to future academic performance, as measured by the GCSE, were explored while controlling for the results of an academic assessment (KS2) administered two years before students took the Aurora tests.

5. Method

5.1. Participants

The participants of this study were drawn from a sample of students recruited through the local education authority located in a town in the

Please cite this article as: Mourgues, C., et al., Using creativity to predict future academic performance: An application of Aurora's five subtests for creativity, *Learning and Individual Differences* (2016), http://dx.doi.org/10.1016/j.lindif.2016.02.001

North of England. A total of 1165 students attending six schools were assessed with the Aurora Battery in January of 2008, when they were in the 7th grade (UK Year 8); 48.3% were females and ages ranged from 11.41 to 13.03 years ($M = 12.56$, $SD = 0.34$). The academic performance scores (KS2), collected from the students in 2006 (2 years previous to Aurora) were collected from the schools, as well as students' performance on their General Certificate of Secondary Education subject exams (GCSE), which were taken by students four years after they took Aurora. KS2 scores were collected from the schools, but were not available for all students at the time that the data was collected. Thus, a subsample of 315 students with available GCSE data was selected to investigate the relationship between creativity and GCSE scores from two schools. This subsample was selected to maximize the overlap between the creativity, GCSE and KS2 variables. It was composed of 46.3% females, and ages ranged from 12.08 to 13.08 years ($M = 12.62$, $SD = .28$).

5.2. Measures

5.2.1. The Aurora battery

The Aurora battery is a set of paper-and-pencil tests developed to assess analytical, creative, and practical skills in a group or classroom setting (Chart et al., 2008). In this study, only Aurora's five subtests for creative skills were considered for analysis. These five subtests of Aurora were designed to assess creativity in different domains: verbal (i.e., *Conversations* and *Figurative Language*), numerical (i.e., *Cartoon Numbers*) and figural (i.e., *Book Covers* and *Multiple Uses*). *Figurative Language* is the only subtest presented in a multiple-choice format; all of the other creativity subtests are open-ended. Trained raters using subtest-specific rubrics scored the open-ended subtests. Each rubric defines two main scores for each item, accuracy and ability. The score for accuracy (from 0 to 2) indicates the appropriateness of the response to the task, while the score for ability (from 0 to 4) reflects the novelty and elaborateness of the response. We describe each subtest below.

5.2.1.1. Conversations (CON). Two inanimate objects (sometimes two objects of the same type, e.g., two shoes, sometimes two different objects) are listed, as if characters in a play. Students are asked to imagine what the objects might say to each other if they could talk; space is given for each object to deliver a line of dialogue (some children added more lines). The subtest's 10 items loaded on one factor in this sample (χ^2 (33) = 87.525, $p < .000$, RMSEA = .057, 90%-CI = .043–.072, CFI = .944, SRMR = .042). The internal consistency obtained by Cronbach's α was .773. The reliability between four raters for a 10.76% overlap in scored subtests was satisfactory (intra-class correlation coefficient, ICC, was .931).

5.2.1.2. Figurative language (FIG). Students are presented with sentences that contain non-literal words or phrases whose meaning should be discernable from the context. There are four sentence choices and students must determine which would most likely come next in the story. The options vary in their implied interpretation of the non-literal word or phrase. There is only one correct answer, scored as 1. The subtest's 12 items loaded on one factor in this sample (χ^2 (54) = 125.304, $p < .000$, RMSEA = .037, 90%-CI = .029–.046, CFI = .975, SRMR = .026). The internal consistency was calculated as Cronbach's α = .835.

5.2.1.3. Cartoon numbers (CN). Pictures of cartoon numbers (numbers drawn as characters) with emotional affect are shown interacting. A brief description of their interaction (usually an emotional exchange) is given and students are asked to write a short explanation of why these numbers might have arrived at such a situation. A response that includes knowledge of both number values and social relationships is encouraged. The subtest has 7 items that loaded on one factor in this sample (χ^2 (13) = 47.456, $p < .000$, RMSEA = .051, 90%-CI = .036–.067, CFI = .958, SRMR = .032). The internal consistency for the subtest was appropriate as indicated by a Cronbach's α of .724. The agreement between two raters with an overlap of 10.0% of scored subtests was acceptable (ICC = .971).

5.2.1.4. Book covers (BC). Students are shown pictures with varying degrees of abstractness and/or imaginative elements. They are asked to imagine that each picture is the cover of a children's book, then write what the story in the book might be about (interpreting the picture in a narrative way). The subtest has 5 items that underlie one factor in a confirmatory factor analysis carried out with this sample (χ^2 (4) = 10.726, $p = .029$, RMSEA = .043, 90-CI% = .012–.075, CFI = .997, SRMR = .011). The internal consistency calculated using Cronbach's α was .708. The reliability between two raters based on a 9.2% overlap in scored subtests was excellent (ICC = 1.00).

5.2.1.5. Multiple uses (MU). Five photographs of every-day objects are shown. Students are asked to give three brand-new uses for each object, either toward a practical end or as an imaginative play prop. While each item as a whole is scored for accuracy, only the most creative response of the three uses is scored for creative ability. *Multiple uses* has 5 items that were explained in this sample by a one-factor model (χ^2 (5) = 11.658, $p < .039$, RMSEA = .036, 90%-CI = .007–.064, CFI = .995, SRMR = .015). The internal consistency obtained using Cronbach's α was .809. The reliability between the two raters based on 9.5% overlap was satisfactory (ICC = .871).

5.2.1.6. Key Stage 2 tests (KS2). The Key Stage tests are part of the English system of national assessment. At the end of specified educational "stages," all students are assessed (using various combinations of paper and pencil tests and teacher assessments) to determine their performance on each of several academic subjects. KS2 tests (which are re-written each year) are administered to students in England at the end of the 5th grade (UK Year 6). These tests assess English (assessed through two subtests, Reading and Writing), Mathematics and Science[1] (DirectGov, 2009). KS2 scores are expressed in national curriculum levels from 1 to 6 (with Level 6 indicating the highest level of performance for children of this age).

5.2.1.7. General Certificate of Secondary Education (GCSE). The GCSE is a national examination format taken by secondary school students aged 16. Students typically select about eight or nine subjects from a suite of around 50 different GCSE subjects, along with 14 vocational GCSEs (General National Vocational Qualifications). Most GCSE subjects were assessed by formal examinations or by coursework, or by a combination of the two. The scores used in this study were drawn solely from the written examination. The only required subjects for students at the time of the study were English, mathematics, and science. GCSE results are coded from A* to G, in which A* is the highest possible grade. For the purposes of the present study, GCSE scores were recoded to range from 1 to 8 (with 8 as the highest possible value). Only the students that had scores on the English GCSE subtest, the science GCSE subtest and the Mathematical GCSE subtest were considered for the posterior analysis. These subject tests were selected because more students had taken them, allowing us to maximize the overlap with the other assessments (as opposed to subjects taken by only a small number of students, such as Art, Physics, or Chemistry).

6. Procedure

Participating schools were recruited through the cooperation of the local education administration. The data collection was carried out as a town wide initiative, with the approval and support of the education authority, each school's head teacher, and every participating teacher.

[1] Science was discontinued as a routinely administered Key Stage subject in 2010 and writing in 2013.

The KS2 test was administered to students in May of 2006, and the resultant test scores were obtained via the local educational authority. Aurora was administered to the same students in January of 2008 in multiple sessions over the course of three days. Each daily session consisted of an hour-long session with the test battery split into three packets. The order of subtests in each packet was counterbalanced in two versions, 1 and 2, and the administration order of the test packets in all data collections was counterbalanced across schools. Four years later, in 2012, the GCSE scores of a subsample of these students were extracted and de-identified through a local research center.

7. Data analysis

7.1. Obtaining the creativity scores

Each open-ended subtest was scored by two raters using a rubric that defines the criteria to score for accuracy (with scores ranging from 0 to 2) and ability (with scores ranging from 0 to 4). Both raters scored between 9.2% and 10.76% of the same students for each subtest. The item level scores for each rater were obtained by adding the accuracy and ability scores. To calibrate the scores, the mean and standard deviation for the overlapped scores between raters were computed. The means and *SD*s obtained in this step were used to calculate rater-calibrated *z*-scores for the non-overlapping items in each subtest for the total sample ($N = 1165$). The mean and *SD* for each item of every subtest were reported in Table S1 to S4 of the supplemental material.

7.2. Analyzing the bias of the selected sample based on GCSE scores

A preliminary analysis of the data was conducted using independent samples *t*-tests to explore group differences between the students who had GCSE data from those for whom GCSE scores were not available, as well as gender differences in creativity and academic performance.

7.3. Investigating the structure of the creativity test

A set of confirmatory factor analyses (CFA) was conducted using the *z*-scores obtained in the calibration process. Three measurement models (Model 1: Subtest and domain factors; Model 2: three domain factors; Model 3: one general factor of creativity) were built to determine the relationships between the subtests. The obtained fit indices were compared for model selection. Multiple fit indices were used to evaluate the goodness-of-fit of each model: the χ^2 and Bollen–Stine bootstrap *p* value of .05 or greater indicating an appropriate fit; a ratio of χ^2 divided by degree of freedom, with values less than 3 indicating an appropriate fit; a Standardized Root Mean Square Residual (SRMR) with values less than ≤.80 indicating an appropriate fit; a Comparative Fit Index (CFI) with values ≥.95 indicating an appropriate fit; and a Root Mean Square Error of Approximation (RMSEA) with values ≤.06 indicating a good fit of the model to the data (Byrne, 2006). The factor scores obtained from the models were saved for subsequent analyses.

7.4. Associations between creativity and academic performance

The second part of the analysis was dedicated to investigating the relationship between creativity and academic performance. In this analysis only the sub-sample of 315 students was used. This subsample corresponded to those students who had scores from the creativity subtests, their GCSEs (i.e., English, Science and Mathematics) and the four subjects of the KS2 (i.e., Reading, Writing, Mathematics, and Science). Correlations between the general creativity score, all five subtests of Aurora, all subjects of the KS2 tests, and the scores for the Mathematics, Science and English GCSE tests were generated for both the larger sample and the subsample. The correlations for the raw scores and the descriptives are reported in Table 1. A structural equation model (SEM) was conducted to explore the role of creativity as a mediator in the longitudinal association between academic achievement as measured by the KS2 subtests and the individual GCSE subject. The same fit indices used in the CFA models were used to report the SEM model.

8. Results

8.1. Preliminary analysis and gender differences

Since GCSE scores were available for students from only two schools, the differences in performance on the creativity subtest and the KS2 were explored using a *t*-test between those students with GCSE scores, $n = 315$, and those without GCSEs, $n = 850$. The two groups were different in age ($M_{GCSE} = 12.6$, SD_{GCSE} SD $= .28$; $M_{NO\text{-}GCSE} = 12.5$, $SD_{NO\text{-}GCSE} = .36$, $t(704.539) = 5.503$, $p < .001$, Cohen's $d = .31$). No other differences were observed for the five creativity subtests between the students that had GCSE scores and those who did not have scores. With respect to previous academic performance, students with GCSE scores obtained higher scores in KS2 Reading ($M_{GCSE} = 4.44$, $SD_{GCSE} =$

Table 1
Descriptives and zero-order correlations for the total sample and the subsample of students with GCSE data.

	M	*SD*	1	2	3	4	5	6	7	8	9	10	11	12	13	14
1. Gender			1	−.237**	−.115	−.190**	−.170**	−.134**	−.259**	−.148**	−.164**	.039	.011			
2. Creativity	.00	.41	−.195**		.645**	.624**	.782**	.798**	.858**	.486**	.510**	.379**	.471**			
3. FIG	.00	.25	−.173*	.625**		.226**	.409**	.437**	.449**	.462**	.389**	.350**	.416**			
4. CN	.00	.42	−.103	.511**	.125		.452**	.414**	.470**	.248**	.303**	.218**	.270**			
5. CON	.00	.44	−.070	.748**	.358**	.323**		.517**	.574**	.349**	.388**	.310**	.370**			
6. MU	.00	.57	−.164*	.783**	.470**	.269**	.490**		.534**	.390**	.404**	.302	.364**			
7. BC	.00	.67	−.172*	.812**	.347**	.381**	.470**	.450**		.356**	.406**	.260**	.359**			
8. KS2-R	4.38	.67	−.161*	.348**	.377**	.145**	.205**	.295**	.230**		.608**	.556**	.642**			
9. KS2-W	3.90	.67	−.243**	.414**	.394**	.133*	.242**	.349**	.320**	.558**		.498**	.536**			
10. KS2-M	4.21	.72	.025	.363**	.354**	.114**	.225**	.284**	.287**	.565**	.415**		.656**			
11. KS2-S	4.39	.67	−.072	.354**	.288**	.144	.275**	.290**	.249**	.570**	.386**	.565**				
12.GCSE-E	4.97	1.45	−.202*	.426**	.374**	.138*	.299**	.415**	.270**	.496**	.462**	.433**	.481**			
13.GCSE-M	5.24	1.36	−.047	.378**	.396**	.058	.297**	.409**	.186**	.436**	.367**	.592**	.527**	.720**		
14.GCSE-S	4.91	1.37	−.059	.386**	.357**	.126**	.251**	.345**	.261**	.512**	.369**	.561**	.584**	.658**	.759**	
	Female	M	–	.10	.03	.08	.07	.08	.17	4.48	4.02	4.18	4.40	5.19	5.21	4.94
		SD	–	.41	.24	.42	.44	.59	.70	.65	.66	.73	.67	1.40	1.46	1.46
	Male	M	–	−.09	−.03	−.07	−.06	−.08	−.15	4.28	3.78	4.23	4.39	4.76	5.26	4.87
		SD	–	.38	.25	.41	.43	.55	.59	.68	.65	.71	.67	1.47	1.28	1.28

Notes. The correlation coefficients for the complete sample of 1165 are reported above the diagonal; the coefficients that correspond to the GCSE sample ($n = 315$) are reported below the diagonal. KS2-R = Key Stage 2 Reading; KS2-W = Key Stage 2 Writing; KS2-M = Key Stage 2 Mathematics; KS2-S = Key Stage 2 Science; GCSE-E = General Certificate of Secondary Education English; GCSE-M = General Certificate of Secondary Education Mathematics; and GCSE-S = General Certificate of Secondary Education Science. All correlation coefficients were significant at the level of $p < .05$. The means and standard deviations provided in the second and third columns are for the GCSE sample. Means and standard deviations for females, males are for the total sample of 1165 students.

Please cite this article as: Mourgues, C., et al., Using creativity to predict future academic performance: An application of Aurora's five subtests for creativity, *Learning and Individual Differences* (2016), http://dx.doi.org/10.1016/j.lindif.2016.02.001

ARTICLE IN PRESS

.62; $M_{NO\text{-}GCSE} = 4.35$, $SD_{NO\text{-}GCSE} = .69$, $t(642.912) = 1.973$, $p = .049$, Cohen's $d = .138$), KS2 Science ($M_{GCSE} = 4.33$, $SD_{GCSE} = .69$, $M_{NO\text{-}GCSE} = 4.5$, $SD_{NO\text{-}GCSE} = .58$, $t(677.050) = 4.773$, $p < .001$, Cohen's $d = .266$), and KS2 Mathematics ($M_{GCSE} = 4.29$, SD_{GCSE} SD = .73; $M_{NO\text{-}GCSE} = 4.17$, $SD_{NO\text{-}GCSE} = .73$, $t(1096) = 2.474$, $p = .014$ Cohen's $d = .164$) than those who did not have GCSE scores.

Using the full sample of 1165 students, gender differences were examined in both creativity and academic performance. Females performed better than males on all of the subtests [$t_{MU}(1138) = -3.92$, Cohen's $d = -.23$; $t_{BC}(1069.99) = -8.10$, Cohen's $d = -.50$; $t_{FIG}(1138) = -4.19$, Cohen's $d = -.25$; $t_{CON}(1138) = -3.92$, Cohen's $d = -.23$; $t_{CN}(1138) = -5.05$, Cohen's $d = -.30$; all $ps < .001$]. Table 1 reports the descriptive statistics for females and males on all five creativity subtests. In academic performance, females performed better than males in KS2 reading [$t(1081) = -4.95$, Cohen's $d = -.30$, $p < .001$], Writing [$t(1092.82) = -6.29$, Cohen's $d = -.38$, $p < .001$], and in KS2 English [$F(1084.23) = -5.09$, Cohen's $d = -.31$, $p < .001$] and GCSE English [$t(261) = 2415$, Cohen's $d = .29$, $p = .016$]. For KS2 Mathematics and Science and GCSE Mathematics and Science the females and males performed similarly.

8.2. The factorial structure of Aurora's creativity subtests

Three different models were constructed to examine whether students' performance on the five subtests was better explained by a general factor of creativity or domain-specific factors of creativity. Model 1 (see Fig. 1) was composed of five method factors corresponding to the subtests CN, BC, FIG, CON and MU, and two trait or domain factors: a figural factor, composed of MU and BC, and a verbal factor, which included FIG and CON scores. Since CN is the only sub test that assesses creativity in the numerical domain, it was not added as a factor domain to this subtest. The model showed good fit indices [$\chi^2 = 812.255$, $df = 659$, $p = .000$, $\chi^2/df = 1.233$, RMSEA = .014, 90%-CI = .011–.017, CFI = .984], however the factor loadings for the domains were not different from zero, suggesting that a model based on subtests or domains may be appropriate. Model 2 (see Fig. 2) was estimated based on three factors (i.e., one for each domain). The items of FIG and CON were explained by a verbal factor, BC and MU by a figural factor and CN by a numerical factor. This model converged, however the fit indices were poor [$\chi^2 = 2817.535$, $df = 699$, $p = .000$, $\chi^2/df = 1.421$, RMSEA = .051, 90%-CI = .049–.053, CFI = .781]. Finally a third model (see Fig. 3) was built in which the five subtests were explained by a general second order factor (Model 3). This model obtained adequate fit indices [$\chi^2 = 990.110$, $df = 697$, $p = .000$, $\chi^2/df = 1.421$, RMSEA = .019, 90%-CI = .016–.022, CFI = .970]. Thus, Model 3 was used for the following analysis. The factor scores for the general factor of creativity were saved and used for the regression analysis.

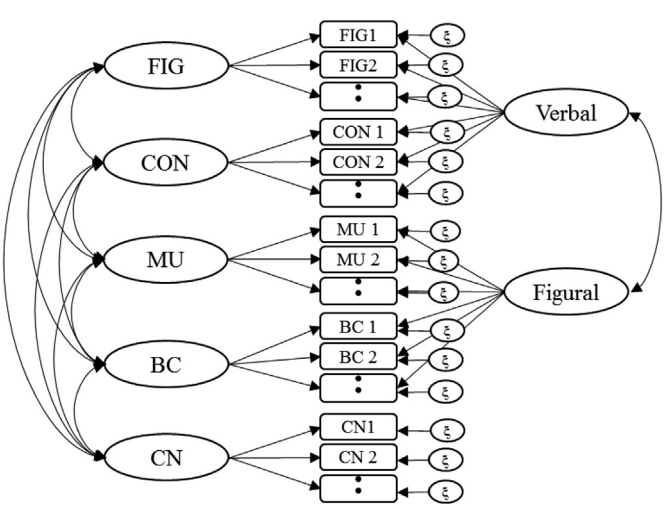

Fig. 1. Model 1: composed of five method factors, one for each subtest; FIG, CON, MU, BC, CN, and two trait or domain factors; verbal and figural.

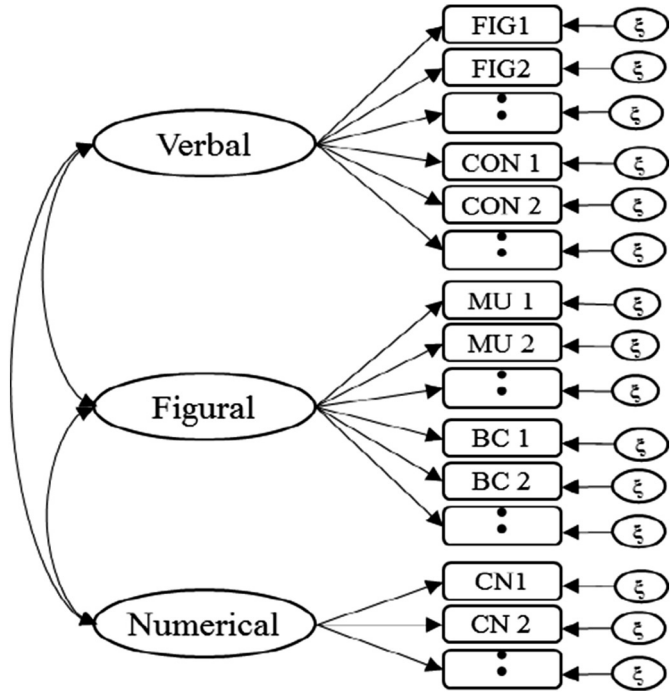

Fig. 2. Model 2: only three factors representing the domains were included in the model. The verbal factor was composed of all the items from CON and FIG, the figural factor from BC and MU, and the numerical factor from CN.

8.3. Relationship between creativity and academic performance

Table 1 shows the zero-order correlations for both the complete sample of 1165 students and the subsample of students with GCSE scores ($n = 315$). The correlation coefficients between Aurora's creativity subtests and academic performance were small to medium and all were significant. The FIG subtests showed the largest associations with academic performance, while CN showed the lowest associations with academic performance and the general factor of creativity.

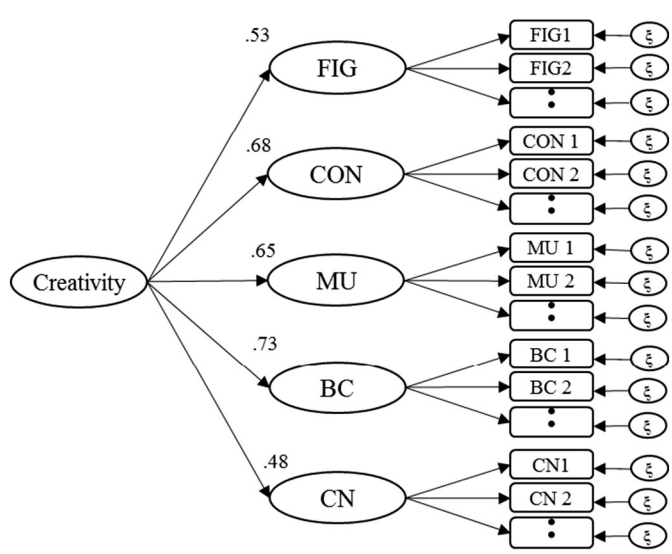

Fig. 3. Model 3: included one second-order factor for creativity and five factors, one for each subtest. The numbers indicate the standardized factor loadings.

Please cite this article as: Mourgues, C., et al., Using creativity to predict future academic performance: An application of Aurora's five subtests for creativity, *Learning and Individual Differences* (2016), http://dx.doi.org/10.1016/j.lindif.2016.02.001

ARTICLE IN PRESS

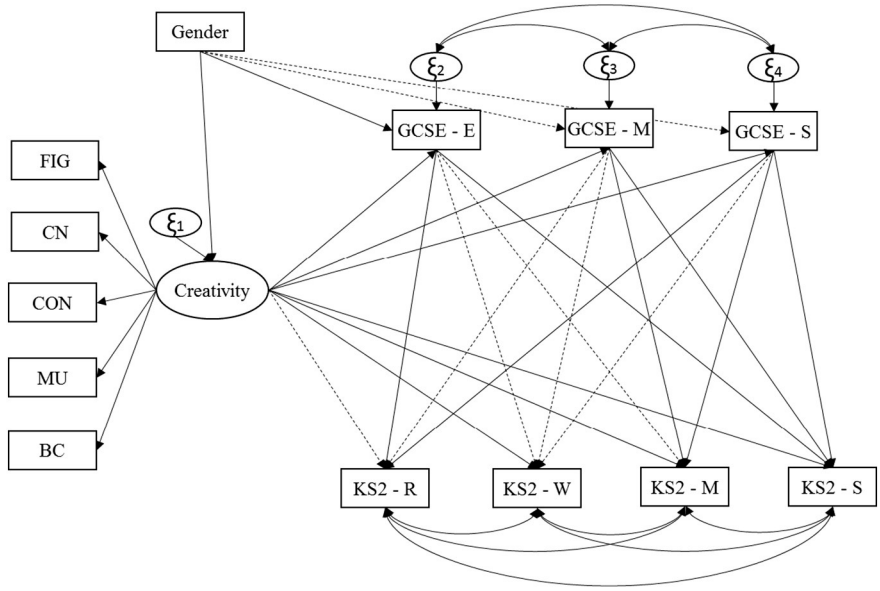

Fig. 4. Full path model (direct and indirect effects) of associations between KS2 subtests, general creativity, and GCSE subject scores. KS2-R = Key Stage 2 Reading; KS2-W = Key Stage 2 Writing; KS2-M = Key Stage 2 Mathematics; KS2-S = Key Stage 2 Science; GCSE-E = General Certificate of Secondary Education English; GCSE-M = General Certificate of Secondary Education Mathematics; and GCSE-S = General Certificate of Secondary Education Science. Dashed lines indicate insignificant path coefficients ($p > .05$). Bold lines indicate significant path coefficients ($p < .05$).

Fig. 4 shows the structural equation model that was specified to analyze whether the general factor of creativity mediates the longitudinal associations between academic achievement measured by the KS2 subtests and individual GCSE subject scores. The GCSE scores and the general factor of creativity were regressed on gender. The model showed an overall appropriate fit to the data ($\chi^2 = 95.86$, $df = 41$, $p < .001$, $\chi^2/df = 2.34$, RMSEA = .065, 90%-CI = .048–.082, CFI = .940, SRMR = .052). Results showed that the KS2 Science scores predicted all three GCSE subject scores as well as the general factor of creativity. KS2 Mathematics scores predicted GCSE Mathematics and Science scores, and were also related to creativity. Performance on the KS2 Writing subtest was related to creativity, but not to any of the GCSE subject scores. KS2 Reading scores were related to performance on the GCSE English and Science subtests. Creativity was related to KS2 Writing, Mathematics and Science scores, and predicted performance on all three GCSE subject scores (English B = 2.356, $SE = .696$, $p = .001$, $\beta = .246$; Mathematics B = 2.050, $SE = .739$, $p = .006$, $\beta = .219$, and Science B = 1.534, $SE = .664$, $p = .021$, $\beta = .163$). Tables S5 to S9 contain the parameter estimates (factor loadings, covariances/correlations, and path coefficients) for the path model. In addition to these main effects, there were three significant indirect effects of the KS2 subtests via creativity on the GCSE subject scores. KS2 Writing predicted general creativity, which in turn predicted performance on the GCSE English subtest ($B = 0.147$, $SE = .060$, $p = .014$, $\beta = .072$). Also creativity mediated the relationship between KS2 Writing and the GCSE Mathematics subtest ($B = 0.128$, $SE = .059$, $p = .031$, $\beta = .064$). Finally, we found a significant indirect effect of KS2 Mathematics on GCSE English via creativity ($B = 0.100$, $SE = .049$, $p = .043$, $\beta = .049$). In these three instances, creativity fully mediated the longitudinal associations between KS2 and GCSE as reflected in statistically insignificant associations between KS2 and GCSE scores when the effect of creativity on GCSE scores is taken into account.

9. Discussion

Three issues appear to be important in the interpretation of the results of our study. First, findings with respect to the domain-general and domain-specific nature of creativity are briefly discussed, focusing on how the characteristics of the Aurora subtests appear to capture a more domain-general creativity. Second, the role of creativity in the prediction of academic performance is discussed. Finally, a brief discussion of the limitations of the study and future directions are presented.

9.1. Aurora's domain-general factor of creativity

This study showed that measurement models for each of the tasks of creativity and one general factor best explain the relationship between the five creativity subtests of the Aurora battery. That is, all of the subtests appear to tap into shared general skills of creativity, but each independently also assesses a set of particular creative skills. Silvia and colleagues (Silvia et al., 2009) argued that when creativity is measured as a product (as with Aurora), it often appears to be domain-specific. However, in this study, domain-specific (i.e., verbal, figural and numerical) creativity did not adequately describe the covariation among Aurora's creativity subtests. These results are not consistent with the literature that proposes that creativity is domain specific, however, the final solution represented in Model 3 is aligned with studies that have proposed that creativity may be task specific. These studies have shown that the performance of the individual across similar tasks is not uniform even when the tasks are from the same domain and are similar in nature. Baer's studies (Baer, 1996, 2014) have shown that an individual may perform differently on two distinct tasks, even though the tasks belong to a similar domain. These studies suggest that different cognitive mechanisms underlie creativity in the same way as observed in this study.

However, it is possible that other aspects of the creativity tasks used in the current study might confound the results. Despite the fact that the subtests were developed to present activities in the verbal, figural and numerical domains of creativity, it is possible that both the types of response and the way that the responses are scored might influence whether creative performance appears to be more domain-general or domain-specific. For example, four of the five subtests require students to write their answers, therefore writing skills might generally affect the quality of the students' responses. In addition, four of the creativity tasks were scored principally for originality. The fifth task involved the interpretation of figurative language, in which students have to select an option that best represents the meaning of a figurative sentence, reflecting flexibility in their use of language. In another study, when *Cartoon*

Please cite this article as: Mourgues, C., et al., Using creativity to predict future academic performance: An application of Aurora's five subtests for creativity, *Learning and Individual Differences* (2016), http://dx.doi.org/10.1016/j.lindif.2016.02.001

Numbers was scored considering only the mathematical concepts employed in the response (i.e., in a very domain-specific fashion), its correlations with academic measures of math increased (Tan et al., 2014).

It is also possible that the obtained results were due to the fact that the models in this study were based on item level information, while other studies conducted analyses using the total scores for subtests grouped by skills (analytical, practical and creative) and domains (figural, numerical and verbal). Studies that have explored the structure of the Aurora Battery using all of the subtests have revealed specific factors related to skills (analytical, creative, practical) but not domains (figural, verbal, numerical). This is the case in a study by Aljughaiman and Ayoub (2012), which explored the factorial structure of the Aurora Battery. The results showed a good fit for a three-factor model, one for each skill, indicating a general factor for each of the creativity, analytical and practical skills. However, the specific domains within each process were not modeled as a single latent factor.

Another reason that creativity may appear to be more general in this population is related to the developmental aspect of creativity. When the Aurora Battery was taken, the students were approximately 13 years old, an age that may simply reflect a stage of creativity development that appears to be more general. Studies on developmental trajectories of creativity show some evidence for different stages of creative development that extend beyond the oft-researched slump that has been found to occur at different ages (Charles & Runco, 2001), possibly representing different aspects of divergent thinking (Runco, 1999), but these studies have generally been conducted in the elementary school ages. In studies of older students, notably, it has been found that by adolescence, some individuals may develop domain-specific creativity that, if exercised and encouraged, may lead to similar creative accomplishments in adulthood. Barbot and Tinio (2015) have proposed a "specialization-differentiation hypothesis" of creativity that outlines how domain specific creative achievements may be attained by some individuals as they direct resources for creative potential (e.g., knowledge, skills, aspects of personality such as openness) toward areas of expression in which they feel a particular commitment or interest. Doing this over time, individuals inevitably develop domain specific creativity, but one not necessarily developing from a "domain general" creativity. Because of these possible developmental trajectories of creativity, it may be that testing younger students may produce results that appear to be more "domain general," while older students, by university level, would express a more domain specific creativity.

9.2. Aurora's creativity measures predict academic performance

The exploration of the factorial structure of the five creativity subtests of the Aurora Battery found that a general factor model showed the best fit to the creativity data, suggesting that what is shared by these subtests exerts a higher influence on later academic performance. The results of this study also showed that the general factor of creativity could be used to predict GCSE scores independently of the KS2, suggesting that the creative skills measured by Aurora are distinct from the academic skills measured by the KS2, and may add value to the long-term prediction of GCSE performance four years later. It may be argued that as creativity is comprised of generative skills (Sternberg, 1984), it is an important component of learning and may thus contribute to academic success in the future (Sternberg, 2009; Sternberg & The Rainbow Project Collaborators, 2006). In this study, creative performance predicted academic performance years later and was indeed distinct from prior academic performance. Hence, our results confirm those of other studies that have shown that creativity increases the accuracy of the prediction of academic performance, although not as much as reported by Sternberg & The Rainbow Project Collaborators (2006), where the addition of creative measures to analytical and practical measures roughly doubled the predictive value of the STAT with respect to the grades of first-year college students. Although previous studies have shown that creativity is able to predict academic performance, its significance has often been eliminated by the addition of other academic measures to the model.

9.3. Limitations and conclusions

As presented in the preliminary analyses above, group differences were obtained for the students whose GCSE scores we were able to obtain and those whose scores we were not able to obtain, which depended upon which schools were able to provide this data. Thus, it is possible that the differences in KS performance may be related to school differences. Yet, while students with available GCSE data came from only two secondary schools, it is important to note that they came from a variety of primary schools, where they were when they sat for their KS2 tests. These primary schools may have had an effect on the performance of the students and thus modulated the relation between academic performance and creativity later during secondary school. We were unable to test this hypothesis due to the unavailability of enough of a sample from each primary school to conduct a multilevel analysis that would show the possible effect of the schools. For future studies, however, it would be important to explore possible sources of any school effects on academic achievement and creativity. It may be possible that in certain school environments, skills in creativity may contribute differentially to future academic performance than in other school environments.

In sum, this work presents suggestive findings concerning the predictive and possibly additive nature of creativity scores for future academic performance. We were able to show small effects of creativity on future academic performance (after four-years), which holds when controlling for the effect of gender. Further exploration of these relationships with larger samples is warranted. Finally, considering that creativity partially accounted for the associations between academic achievement measured in elementary and, years later, in secondary school underscores the importance of investigating how the classroom environment might promote students' creative potential in specific or general domains in conjunction with their academic achievement and educational aspirations.

Appendix A. Supplementary data

Supplementary data to this article can be found online at http://dx.doi.org/10.1016/j.lindif.2016.02.001.

References

ACER, Australian Council for Educational Research (1981). *ACER high tests ML.-MQ and PL-PQ manual.* Melbourne: Victoria Alanby Press.

Ai, X. (1999). Creativity and academic achievement: An investigation of gender differences. *Creativity Research Journal*, *12*(4), 329–337.

Aljughaiman, A.M., & Ayoub, A.E.A. (2012). The effect of an enrichment program on developing analytical, creative, and practical abilities of elementary gifted students. *Journal for the Education of the Gifted*, *0162353212440616*.

Amabile, T.M. (1983). The social psychology of creativity: A componential conceptualization. *Journal of Personality and Social Psychology*, *45*(2), 357.

Baer, J. (1996). The effects of task-specific divergent-thinking training. *Journal of Creative Behaviour*, *30*(3), 183–187.

Baer, J. (2010). Is creativity domain specific? In J.C. Kaufman, & R.J. Sternberg (Eds.), *The Cambridge handbook of creativity* (pp. 321–341). New York, NY, US: Cambridge University Press.

Baer, J. (2014). *Creativity and divergent thinking: A task-specific approach.* New Jersey: Lwrence Erlbaum Associated Inc.

Barbot, B., & Tinio, P. (2015). Where is the "g" in creativity? A specialization–differentiation hypothesis. *Frontiers in Human Neuroscience*, *8*. http://dx.doi.org/10.3389/fnhum.2014.01041.

Byrne, B. (2006). *Structural equation modeling with EQS.* Mahwah, NJ: Lawrence Erlbaum.

Charles, R.E., & Runco, M.A. (2001). Developmental trends in the evaluative and divergent thinking of children. *Creativity Research Journal*, *13*(3–4), 417–437.

Chart, H., Grigorenko, E.L., & Sternberg, R.J. (2008). Identification: The Aurora battery. In J.A. Plucker, & C.M. Callahan (Eds.), *Critical issues and practices in gifted education* (pp. 281–301). Waco,TX: Prufrock.

Cicirelli, V.G. (1965). Form of the relationship between creativity, IQ, and academic achievement. *Journal of Educational Psychology*, *56*(6), 303.

ARTICLE IN PRESS

Csikszentmihalyi, M. (1990). *The domain of creativity Theories of creativity*. London: Sage, 190–214.

DirectGov (2009). National curriculum teacher assessments and key stage tests. Retrieved 25 September, 2012, from http://www.direct.gov.uk/en/Parents/Schoolslearningand development/ExamsTestsAndTheCurriculum/DG_10013041

Feist, G.J. (1998). A meta-analysis of personality in scientific and artistic creativity. *Personality and Social Psychology Review*, *2*(4), 290–309.

Flynt, C.J. (2008). *Predicting academic achievement from classroom behaviors.* (Doctor of Philosophy) Blacksburg, Virginia: Polytechnic Institute and State University.

Freund, P.A., Holling, H., & Preckel, F. (2007). A multivariate, multilevel analysis of the relationship between cognitive abilities and scholastic achievement. *Journal of Individual Differences*, *28*(4), 188–197.

Gralewski, J., & Karwowski, M. (2012). Creativity and school grades: A case from Poland. *Thinking Skills and Creativity*, *7*(3), 198–208.

Grigorenko, E.L., Jarvin, L., Diffley, R., III, Goodyear, J., Shanahan, E.J., & Sternberg, R.J. (2009). Are SSATS and GPA enough? A theory-based approach to predicting academic success in secondary school. *Journal of Educational Psychology*, *101*(4), 964–981.

Han, Ki-S, & Marvin, C. (2002). Multiple creativities? Investigating domain-specificity of creativity in young children. *Gifted Child Quarterly*, *46*(2), 98–109.

Holland, J.L. (1961). Creative and academic performance among talented adolescents. *Journal of Educational Psychology*, *52*(3), 136–147.

Hong, E., Milgram, R.M., & Gorsky, H. (1995). Original thinking as a predictor of creative performance in young children. *Roeper Review*, *18*(2), 147–149.

Howieson, N. (1981). A longitudinal study of creativity — 1965–1975. *Journal of Creative Behaviour*, *15*(2), 117–134.

Kaufman, J.C. (2010). Using creativity to reduce ethnic bias in college admissions. *Review of General Psychology*, *14*(3), 189–203.

Kim, K.H., Cramond, B., & VanTassel-Baska, J. (2010). In J.C. Kauffman, & R.J. Sternberg (Eds.), *The relationship between creativity and intelligence*. New York: Cambridge University Press.

Kornilov, S.A., Tan, M., Elliott, J.G., Sternberg, R.J., & Grigorenko, E.L. (2011). Gifted identification with Aurora: Widening the spotlight. *Journal of Psychoeducational Assessment*, *30*(1), 117–133.

Marjoribanks, K. (1976). Academic achievement, intelligence, and creativity: A regression surface analysis. *Multivariate Behavioral Research*, *11*(1), 105–118.

McCabe, M.P. (1991). Influence of creativity and intelligence on academic performance. *Journal of Creative Behaviour*, *25*(2), 116–122.

Niaz, M., Núñez, G.S., & Pineda, I.R. (2000). Academic performance of high school students as a function of mental capacity, cognitive style, mobility-fixity dimension, and creativity. *Journal of Creative Behaviour*, *34*(1), 18–29.

Plucker, J.A., & Beghetto, R.A. (2004). Why creativity is domain general, why It looks domain specific, and why the distinction does not matter. In R.J. Sternberg, E.G. Grigorenko, & J.L. Singer (Eds.), *Creativity: From Potential to Realization* (pp. 153–167). Washington, DC: American Psychological Association.

Rindermann, H., & Neubauer, A.C. (2004). Processing speed, intelligence, creativity, and school performance: Testing of causal hypotheses using structural equation models. *Intelligence*, *32*(6), 573–589.

Runco, M.A. (1999). A longitudinal study of exceptional giftedness and creativity. *Creativity Research Journal*, *12*(2), 161–164.

Silvia, P.J., Kaufman, J.C., & Pretz, J.E. (2009). Is creativity domain-specific? Latent class models of creative accomplishments and creative self-descriptions. *Psychology of Aesthetics, Creativity, and the Arts*, *3*(3), 139–148.

Sternberg, R.J. (1984). Toward a triarchic theory of human intelligence. *Behavioral and Brain Sciences*, *7*(2), 269–316.

Sternberg, R.J. (1999). The theory of successful intelligence. *Review of General Psychology*, *3*(4), 292–316.

Sternberg, R.J. (2003). *Wisdom, intelligence, and creativity synthesized.* New York: Cambridge University Press.

Sternberg, R. J., & The Rainbow Project Collaborators (2006). The rainbow project: Enhancing the SAT through assessments of analytical, practical, and creative skills. *Intelligence*, *34*(4), 321–350.

Sternberg, R.J. (2009). The Rainbow and Kaleidoscope Projects. *European Psychologist*, *14*(4), 279–287.

Sternberg, R.J., & Lubart, T.I. (1999). *The concept of creativity: Prospects and paradigms*. New York: Cambridge University Press.

Sternberg, R.J., Ferrari, M., Clinkenbeard, P., & Grigorenko, E.L. (1996). Identification, instruction, and assessment of gifted children: A construct validation of a triarchic model. *Gifted Child Quarterly*, *40*(3), 129–137.

Tan, M., Mourgues, C., Bolden, D.S., & Grigorenko, E.L. (2014). Making numbers come to life: Two scoring methods for creativity in Aurora's cartoon numbers. *Journal of Creative Behaviour*, *48*(1), 25–43.

Torrance, E. (1972). Predictive validity of the Torrance Tests of Creative Thinking. *Journal of Creative Behaviour*, *6*(4), 236–262.

Please cite this article as: Mourgues, C., et al., Using creativity to predict future academic performance: An application of Aurora's five subtests for creativity, *Learning and Individual Differences* (2016), http://dx.doi.org/10.1016/j.lindif.2016.02.001